WIRING INSTRUCTIONS

TITLE **CIRCULAR SAW with TILT-LOK® HANDLE**

BULLETIN **58-01-1320**

MILWAUKEE ELECTRIC TOOL CORP. 13135 WEST LISBON RD. BROOKFIELD, WIS.

DATE Jan. '99

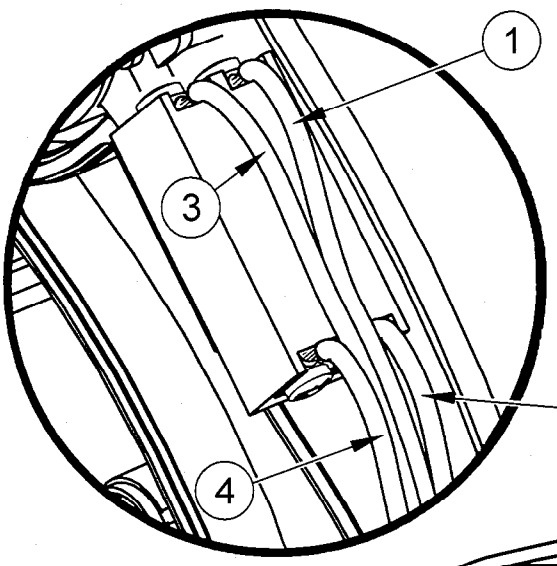

White lead wires #1 and #3 are to be routed to the top of the switch. Position of #1 and #3 are interchangeable.

Black lead wires #2 and #4 are to be routed to the bottom of the switch. Position of #2 and #4 are interchangeable.

Crimp faces must face away from switch.

Bend leads at 90°, making sure not to break wire strands. Ensure all terminals are secure by applying light finger pressure. Route white leads through black leads at switch area as shown.

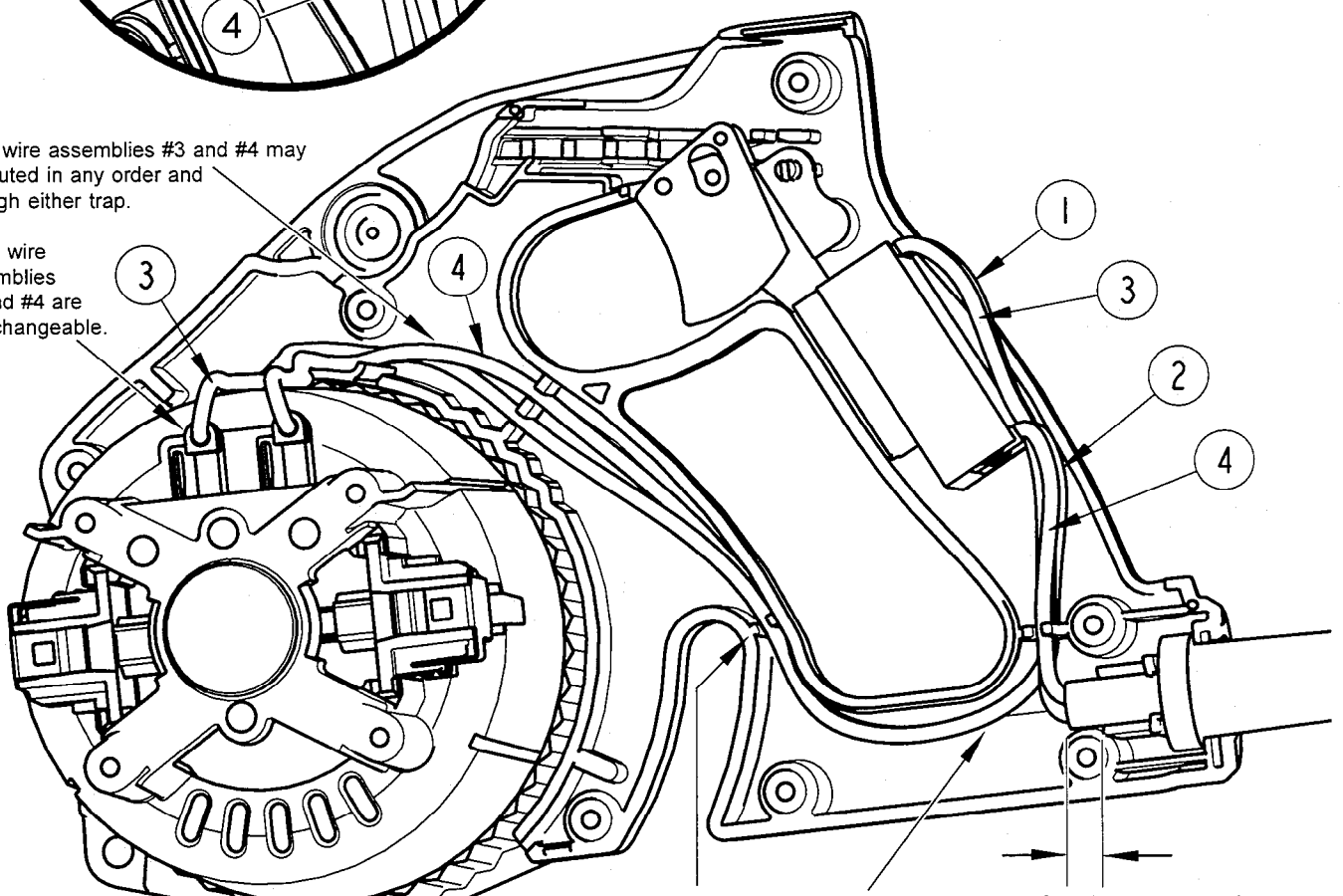

WIRING SPECIFICATIONS

Wire No.	Wire Color	Origin or Part No.	Gauge	Length	Terminals, Connectors and End Wire Preparation
1	White	Cord	14	5.50	Strip .125 for T1.
2	Black	Cord	14	3.75	Strip .125 for T1.
3	White	23-94-1180			
4	Black	23-94-1185			

BULK LEAD WIRE - BULLETIN 58-01-0003

NOTE:
All lead lengths are before stripping.
All leads must be held to ± .125" unless specified elsewhere.
Strip wire per ES 13-11.
Crimp terminals per ES 13-15.

TERMINAL DESCRIPTION

Code	Part No.	Qty.
T1	23-74-0120	2

Drwg. 1